1)

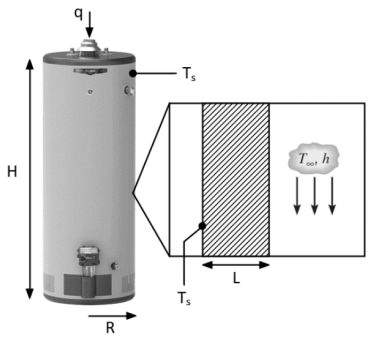

$R = 0.5\,m$

$H = 1\,m$

$T_{inside} = 50°C$

$T_s = 50°C$ (steady-state)

$T_\infty = 20°C$

$h = 15\ W/m^2K$

$L = 0.02\ m$

$k = 0.1\ W/mK$

a) $\dot{E}_{in} - \dot{E}_{out} = 0$

$q_{elec} = q_{conv}$

$q_{elec} = hA(T_s - T_\infty)$

$q_{elec} = h(2\pi RH + \pi R^2)(T_s - T_\infty)$

$q_{elec} = (15)(2\pi(0.5)(1) + \pi(0.5)^2)(50-20)$

$\boxed{q_{elec} = 1767.15\ W}$

b) $\dot{E}_{in} = \dot{E}_{out}$

$q_{cond} = q_{conv}$

$-kA\frac{dT}{dx} = hA(T_o - T_\infty)$

$-\frac{k(T_o - T_s)}{L} = h(T_o - T_\infty)$

$-\frac{0.1(T_o - 50)}{0.02} = 15(T_o - 20)$

$T_o = 27.5°C$

$q_{conv} = hA(T_o - T_\infty)$

$q_{conv} = (15)(2\pi(0.5)(1) + \pi(0.5)^2)(27.5-20)$

$\boxed{q_{conv} = 441.79\ W}$

c) Adding insulation caused the electrical heating power q to decrease from 1767.15 W to 441.79 W which means it reduced the electrical power to maintain the 50°C for the water. This means the insulation is great for energy savings.

2)

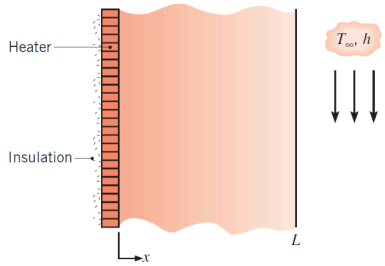

$L = 0.1\ m$

$k = 1\ W/mK$

$T_\infty = 20°C$

$h = 100\ W/m^2K$

a) $q'' = 1000\ W/m^2$

$\dot{E}_{in} - \dot{E}_{out} = 0$

$q'' = q''_{conv}$

$q'' = h(T_L - T_\infty)$

$T_L = \frac{q''}{h} + T_\infty$

$T_L = \frac{(1000)}{100} + 20$

$\boxed{T_L = 30°}$

$\dot{E}_{in} - \dot{E}_{out} = 0$

$q'' = q''_{cond.}$

$q'' = \frac{k(T_0 - T_L)}{L}$

$T_0 = \frac{q''L}{k} + T_L$

$T_0 = \frac{(1000)(0.1)}{(1)} + 30$

$\boxed{T_0 = 130°C}$

b) $T_{max} = 200°C$

$\dot{E}_{in} - \dot{E}_{out} = 0$

$q''_{conv} = q''_{cond.}$

$h(T_s - T_\infty) = -\frac{k}{L}(T_s - T_{max})$

$(100)(T_s - 20) = -\frac{(1)}{0.1}(T_s - 200)$

$T_s \simeq 36.36°C$

$q'' = -k\frac{dT}{dx}$

$q'' = -\frac{k}{L}(T_s - T_{max})$

$q'' = -\frac{(1)}{(0.1)}(36.36 - 200)$

$\boxed{q'' = 1636.4\ W/m^2}$

c)

1- Lower the coolant temperature T_∞

2- Use a coolant that has a higher heat transfer coefficient h

3- Change the material of the thin film heater to have a higher thermal conductivity k.

3)

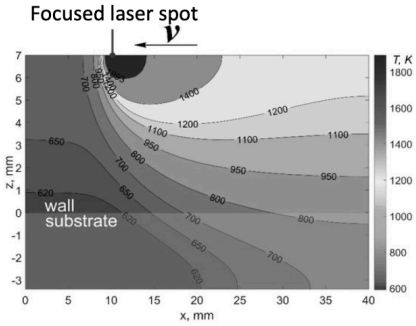

a)

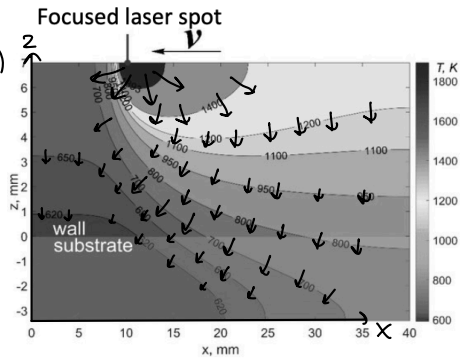

b) Based on the temperature profile, the left side of the laser spot has a larger heat flux because the isotherms are more close together, meaning there are greater temperature changes at shorter distances on the left side which supports larger heat flux.